TEL 905.695.2055 **toll free** 1.800.660.5391
FAX 905.695.2056 **toll free** 1.800.660.5390
33 West Beaver Creek Road Richmond Hill, Ontario Canada L4B 1L8

1560, MINI CONNECTOR

PRODUCT DETAILS

No.	:	1560-01
Product Color	:	BLACK

TECHNICAL DETAILS

OPTIONS AVAILABLE

ITEM NO.	FINISH	SHADE
1560-01	BLACK	
1560-02	WHITE	
1560-S5	PLATINUM	

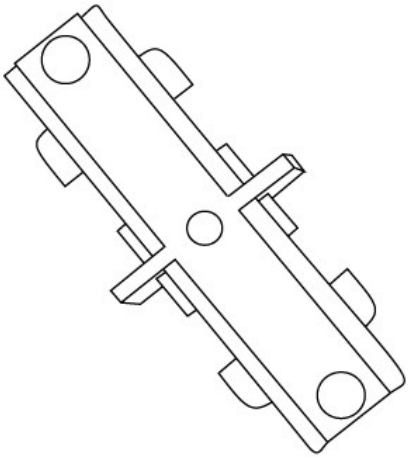

PROJECT INFORMATION

Job Name: _____ Date: _____ Category: _____

Comments: _____