TEL 905.695.2055 **toll free** 1.800.660.5391
FAX 905.695.2056 **toll free** 1.800.660.5390
33 West Beaver Creek Road Richmond Hill, Ontario Canada L4B 1L8

19597, TRIM,3 1/4IN ROUND REGRESS

PRODUCT DETAILS

No.	:	19597-01
Product Color	:	BLACK
Diameter	:	4.5"
Height	:	1.75"

LIGHT SOURCE DETAILS

Number of Bulbs	:	1 / 1
Light Source	:	Halogen / Halogen
Light Source Type	:	MR16 / GU10
Input Voltage	:	120 / 120V
Bulb Voltage	:	12 / 120V
Socket Type	:	/
Wattage	:	50 / 50W
Total Wattage	:	50 / 50W
Bulb Included	:	No / No
Dimmable	:	Yes / Yes

OPTIONS AVAILABLE

ITEM NO.	FINISH	SHADE
19597-01	BLACK	
19597-02	WHITE	
19597-03	GOLD	
19597-04	SATIN NICKEL	
19597-05	CHROME	
19597-08	SATIN COPPER	
19597-09	BRONZE	

TECHNICAL DETAILS

Light Direction	:	Down
Adjustable Lamp Head	:	No
Approval	:	ETL Intertek
Cut Hole Diameter	:	3.5"

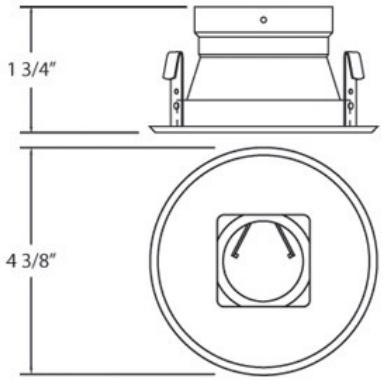

PROJECT INFORMATION

Job Name: _____ Date: _____ Category: _____

Comments: _____