TEL 905.695.2055 **toll free** 1.800.660.5391
FAX 905.695.2056 **toll free** 1.800.660.5390

33 West Beaver Creek Road Richmond Hill, Ontario Canada L4B 1L8

SALVO, 16" ROUND PENDANT

PRODUCT DETAILS

No.	:	25706-024
Product Color	:	CHROME
Shade / Accent Colour	:	FABRIC
Diameter	:	15.75"
Height	:	6.75"
Overall Height	:	63.75"
Weight	:	7.7LBS

LIGHT SOURCE DETAILS

Number of Bulbs	:	2
Light Source	:	BULB
Light Source Type	:	B10
Input Voltage	:	120V
Bulb Voltage	:	120V
Socket Type	:	E12
Wattage	:	60W
Total Wattage	:	120W
Bulb Included	:	NO
Dimmable	:	YES

OPTIONS AVAILABLE

ITEM NO.	FINISH	SHADE
25706-024	**CHROME**	WHITE/CLEAR CAST CRYSTAL

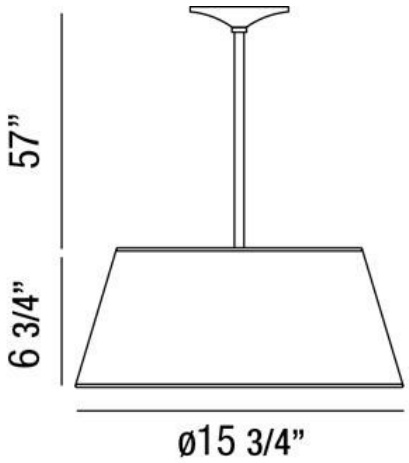

TECHNICAL DETAILS

Light Direction	:	DOWN
Hanging Support Type	:	ROD
Hanging Support Length	:	57"
Rods Included	:	3" +6" +12" +18" +18"
Adjustable Lamp Head	:	NO
Approval	:	c UL us LISTED

PROJECT INFORMATION

Job Name: _____ Date: _____ Type: _____

Comments: _____