TEL 905.695.2055 **toll free** 1.800.660.5391
FAX 905.695.2056 **toll free** 1.800.660.5390
33 West Beaver Creek Road Richmond Hill, Ontario Canada L4B 1L8

BORTO, 27" LINEAR CHANDELIER

Options Available

ITEM NO.	FINISH	SHADE
28162-018	WHITE	
28162-025	BLACK	
28162-032	GREY	FROSTED

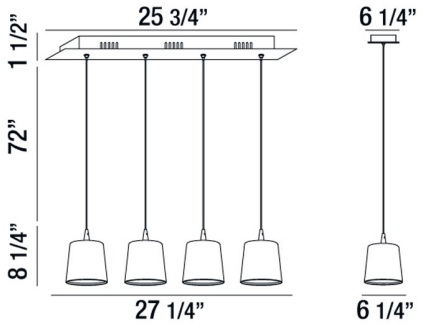

PRODUCT DETAILS

No.	:	28162-018
Product Color	:	WHITE
Product Material	:	METAL
Length	:	27.25"
Width	:	6.25"
Height	:	8.25"
Overall Height	:	81.75"
Weight	:	10.1lbs

LIGHT SOURCE DETAILS

Light Source Type	:	INTEGRATED LED
Input Voltage	:	120V
Bulb Voltage	:	120V
Socket Type	:	LED
Total Wattage	:	24W
Total Lumen	:	1300lm
Kelvin	:	4200K
CRI	:	80+
Dimmable	:	Yes

TECHNICAL DETAILS

Light Direction	:	Down
Hanging Support Type	:	WIRE
Hanging Support Length	:	72"
Canopy / Backplate Length	:	25.75"
Canopy / Backplate Height	:	1.5"
Canopy / Backplate Width	:	6.25"
Adjustable Lamp Head	:	No
Location	:	DRY
Approval	:	Intertek

PROJECT INFORMATION

Job Name: _____ Date: _____ Type: _____

Comments: _____