EUROfase INC.

TEL 905.695.2055 **toll free** 1.800.660.5391
FAX 905.695.2056 **toll free** 1.800.660.5390

33 West Beaver Creek Road Richmond Hill, Ontario Canada L4B 1L8

BANDERIA, 33" ROUND CHANDELIER

PRODUCT DETAILS

No.	:	30080-010
Product Color	:	BRONZE
Product Material	:	METAL
Shade / Accent Colour	:	BRONZE/GOLD
Shade / Accent Material	:	METAL RIBBONS
Diameter	:	33"
Height	:	4.75"
Overall Height	:	102.25"
Weight	:	9.6lbs

LIGHT SOURCE DETAILS

Light Source Type	:	INTEGRATED LED
Input Voltage	:	120V
Bulb Voltage	:	120V
Socket Type	:	LED
Total Wattage	:	40W
Total Lumen	:	3700lm
Kelvin	:	3000K
CRI	:	80+
Dimmable	:	Yes

TECHNICAL DETAILS

Light Direction	:	Down
Hanging Support Type	:	AIRCRAFT CABLE
Hanging Support Length	:	96"
Canopy / Backplate Height	:	1.5"
Canopy / Backplate Dia.	:	6.25"
Adjustable Lamp Head	:	No
Location	:	DRY
Approval	:	

Options Available

ITEM NO.	FINISH	SHADE
30080-010	BRONZE	BRONZE/GOLD

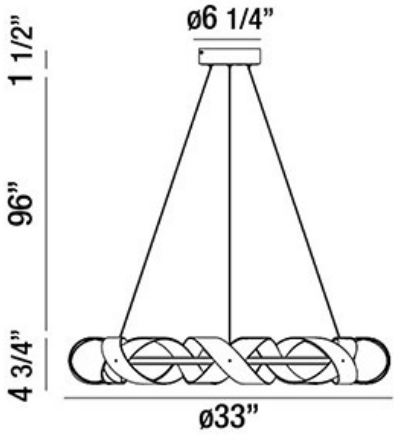

PROJECT INFORMATION

Job Name: _____ Date: _____ Type: _____

Comments: _____