TEL 905.695.2055 **toll free** 1.800.660.5391
FAX 905.695.2056 **toll free** 1.800.660.5390
33 West Beaver Creek Road Richmond Hill, Ontario Canada L4B 1L8

30305, 3-LIGHT 14.4W LED LENS MULTIPLE RECESS

PRODUCT DETAILS

No.	:	30305-01
Product Color	:	BLACK
Shade / Accent Colour	:	BLACK
Length	:	14.5"
Width	:	6.125"
Height	:	6.5"
Weight	:	4lbs

LIGHT SOURCE DETAILS

Light Source Type	:	INTEGRATED LED
Input Voltage	:	120V
Bulb Voltage	:	120V
Socket Type	:	LED
Total Wattage	:	43.2W
Initial Lumens	:	3540lm
Kelvin	:	3000K
CRI	:	80
Dimmable	:	Yes

OPTIONS AVAILABLE

ITEM NO.	FINISH	SHADE
30305-01	BLACK	BLACK
30305-02	WHITE	WHITE
30305-0N	PLATINUM	PLATINUM

TECHNICAL DETAILS

Light Direction	:	Down
Adjustable Lamp Head	:	No
Location	:	DAMP
Approval	:	
Title 24	:	Yes
Beam Angle	:	120
Cut Hole Length	:	13.375"
Cut Hole Width	:	5.125"

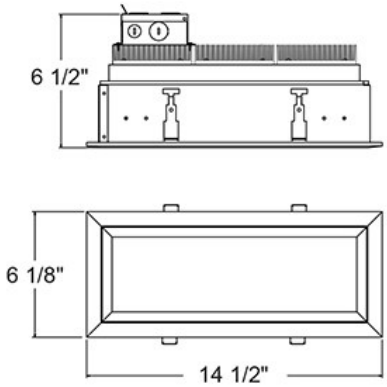

PROJECT INFORMATION

Job Name: Date: Category:

Comments: