TEL 905.695.2055 **toll free** 1.800.660.5391
FAX 905.695.2056 **toll free** 1.800.660.5390
33 West Beaver Creek Road Richmond Hill, Ontario Canada L4B 1L8

VAUGHAN, 24IN INTEGRATED LED PENDANT CHANDELIER

PRODUCT DETAILS

No.	:	31783-019
Product Color	:	BRONZE-GOLD MIX
Product Material	:	METAL
Shade / Accent Colour	:	GOLD
Shade / Accent Material	:	STEEL
Length	:	24"
Width	:	24"
Diameter	:	24"
Height	:	5.5"
Overall Height	:	103"
Weight	:	19.3LBS

LIGHT SOURCE DETAILS

Light Source Type	:	INTEGRATED LED
Input Voltage	:	120V
Bulb Voltage	:	120V
Socket Type	:	INTEGRATED
Total Wattage	:	75W
Delivered Lumens	:	695LM
Kelvin	:	3000K
CRI	:	80
Dimmable	:	YES

OPTIONS AVAILABLE

ITEM NO.	FINISH	SHADE
31783-019	BRONZE-GOLD MIX	BRONZE/GOLD
31783-024	SILVER-BLACK MIX	

TECHNICAL DETAILS

Hanging Support Type	:	WIRE
Hanging Support Length	:	96"
Rods Included	:	NO
Canopy / Backplate Length	:	9.5"
Canopy / Backplate Height	:	2"
Canopy / Backplate Width	:	9.5"
Canopy / Backplate Dia.	:	9.5"
Driver	:	ES, CONSTANT VOLTAGE, 96W*1
Adjustable Lamp Head	:	NO
IP Rating	:	IP22
Approval	:	
Beam Angle	:	360

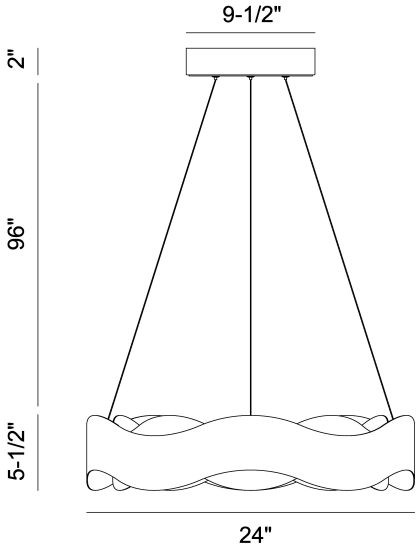

PROJECT INFORMATION

Job Name: Date: Type:

Comments: