EUROfase INC.

**TEL** 905.695.2055 **toll free** 1.800.660.5391
**FAX** 905.695.2056 **toll free** 1.800.660.5390

33 West Beaver Creek Road Richmond Hill, Ontario Canada L4B 1L8

# MONDO, 41" LINEAR CHANDELIER

## PRODUCT DETAILS

| | | |
|---|---|---|
| No. | : | 31832-014 |
| Product Color | : | ANTIQUE GOLD |
| Product Material | : | METAL |
| Shade / Accent Colour | : | CRYSTAL |
| Shade / Accent Material | : | CRYSTAL ORBS |
| Length | : | 40.5" |
| Width | : | 11" |
| Height | : | 9.5" |
| Overall Height | : | 82.5" |
| Weight | : | 27.7LBS |

## LIGHT SOURCE DETAILS

| | | |
|---|---|---|
| Number of Bulbs | : | 10 |
| Light Source | : | BULB |
| Light Source Type | : | G9 |
| Input Voltage | : | 120V |
| Bulb Voltage | : | 120V |
| Socket Type | : | G9 |
| Wattage | : | 40W |
| Total Wattage | : | 400W |
| Bulb Included | : | YES |
| Dimmable | : | YES |

## OPTIONS AVAILABLE

| ITEM NO. | FINISH | SHADE |
|---|---|---|
| 31832-014 | ANTIQUE GOLD | CLEAR |

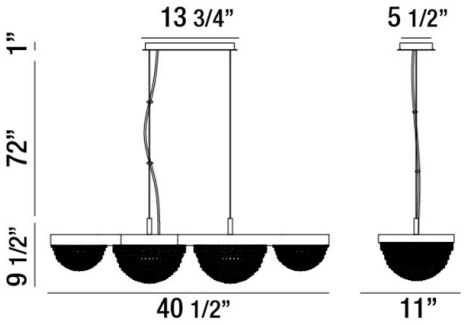


## TECHNICAL DETAILS

| | | |
|---|---|---|
| Light Direction | : | DOWN |
| Hanging Support Type | : | AIRCRAFT CABLE |
| Hanging Support Length | : | 72" |
| Canopy / Backplate Length | : | 13.75" |
| Canopy / Backplate Height | : | 1" |
| Canopy / Backplate Width | : | 5.5" |
| Adjustable Lamp Head | : | NO |
| IP Rating | : | DRY |
| Approval | : | |

## PROJECT INFORMATION

Job Name: _____ Date: _____ Type: _____

Comments: _____