EUROfase® INC.

TEL 905.695.2055 **toll free** 1.800.660.5391
FAX 905.695.2056 **toll free** 1.800.660.5390

33 West Beaver Creek Road Richmond Hill, Ontario Canada L4B 1L8

32365, 1-LIGHT 20W LED

PRODUCT DETAILS

No.	:	32365-35-01
Product Color	:	BLACK
Shade / Accent Colour	:	CLEAR
Length	:	7"
Width	:	3.375"
Height	:	7.75"
Weight	:	1.3lbs

LIGHT SOURCE DETAILS

Light Source Type	:	INTEGRATED LED
Input Voltage	:	120V
Bulb Voltage	:	120V
Socket Type	:	LED
Total Wattage	:	20W
Total Lumen	:	1400lm
Kelvin	:	3500K
CRI	:	90
Dimmable	:	Yes

TECHNICAL DETAILS

IP Rating	:	20
Location	:	DRY
Approval	:	
Title 24	:	Yes
Beam Angle	:	24
Vertical Adjustment	:	90
Horizontal Adjustment	:	340

Options Available

ITEM NO.	FINISH	SHADE
32365-35-01	BLACK	CLEAR
32365-35-02	WHITE	CLEAR

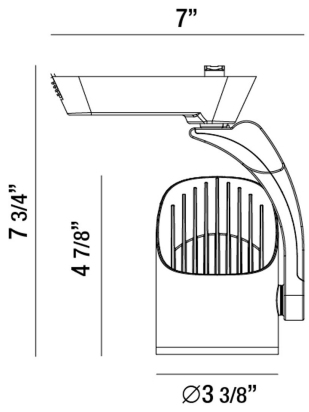

PROJECT INFORMATION

Job Name: Date: Type:

Comments: