EUROfase INC.

TEL 905.695.2055 **toll free** 1.800.660.5391
FAX 905.695.2056 **toll free** 1.800.660.5390

33 West Beaver Creek Road Richmond Hill, Ontario Canada L4B 1L8

HARBOURVIEW, 41IN INTEGRATED LED LINEAR CHANDELIER

OPTIONS AVAILABLE

ITEM NO.	FINISH	SHADE
35942-016	BRUSHED SILVER	

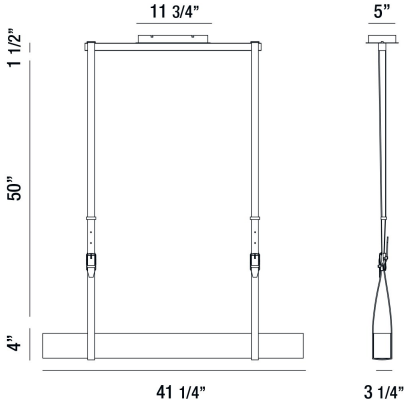

PRODUCT DETAILS

No.	:	35942-016
Product Color	:	BRUSHED SILVER
Product Material	:	METAL
Shade / Accent Colour	:	SILVER
Shade / Accent Material	:	STEEL
Length	:	41.25"
Width	:	3.25"
Height	:	4"
Overall Height	:	55.5"
Weight	:	14.4LBS

LIGHT SOURCE DETAILS

Light Source Type	:	INTEGRATED LED
Input Voltage	:	120V
Bulb Voltage	:	120V
Socket Type	:	INTEGRATED
Total Wattage	:	29W
Delivered Lumens	:	1350LM
Kelvin	:	3000K
CRI	:	85
Dimmable	:	YES

TECHNICAL DETAILS

Hanging Support Type	:	LEATHER
Hanging Support Length	:	50"
Canopy / Backplate Length	:	11.75"
Canopy / Backplate Height	:	1.5"
Canopy / Backplate Width	:	5"
Driver	:	HUEUC
IP Rating	:	IP22
Location	:	DRY
Approval	:	
Title 24	:	YES
Beam Angle	:	360

PROJECT INFORMATION

Job Name: Date: Type:

Comments: