TEL 905.695.2055 **toll free** 1.800.660.5391
FAX 905.695.2056 **toll free** 1.800.660.5390

33 West Beaver Creek Road Richmond Hill, Ontario Canada L4B 1L8

ADMIRAL, 60" LINEAR CHANDELIER

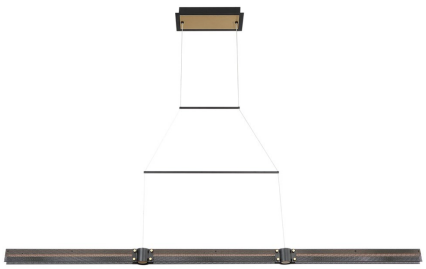

PRODUCT DETAILS

No.	:	37058-012
Product Color	:	MATTE BLACK/GOLD
Product Material	:	METAL
Shade / Accent Material	:	METAL
Length	:	59.5"
Width	:	2"
Height	:	2"
Overall Height	:	99.75"
Weight	:	9.2lbs

LIGHT SOURCE DETAILS

Light Source Type	:	INTEGRATED LED
Input Voltage	:	120V
Bulb Voltage	:	120V
Socket Type	:	LED
Total Wattage	:	29W
Total Lumen	:	1080lm
Kelvin	:	3000K
CRI	:	90+
Dimmable	:	Yes

TECHNICAL DETAILS

Hanging Support Type	:	WIRE
Hanging Support Length	:	96"
Canopy / Backplate Length	:	11.75"
Canopy / Backplate Height	:	1.75"
Canopy / Backplate Width	:	6"
Location	:	DRY
Approval	:	
Title 24	:	Yes

Options Available

ITEM NO.	FINISH	SHADE
37058-012	MATTE BLACK/GOLD	

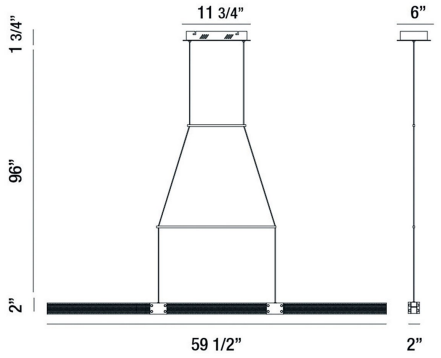

PROJECT INFORMATION

Job Name: _____ Date: _____ Type: _____

Comments: _____