EUROfase INC.

TEL 905.695.2055 **toll free** 1.800.660.5391
FAX 905.695.2056 **toll free** 1.800.660.5390

33 West Beaver Creek Road Richmond Hill, Ontario Canada L4B 1L8

COBURG, 3-LIGHT 42IN INTEGRATED LED LINEAR CHANDELIER

PRODUCT DETAILS

No.	:	38044-030
Product Color	:	ANODIZED SILVER
Product Material	:	METAL
Shade / Accent Colour	:	WHITE
Shade / Accent Material	:	ACRYLIC
Length	:	42"
Width	:	14"
Height	:	24.25"
Overall Height	:	96.75"
Weight	:	35.2LBS

LIGHT SOURCE DETAILS

Light Source Type	:	INTEGRATED LED
Input Voltage	:	120V
Bulb Voltage	:	24V
Socket Type	:	INTEGRATED
Total Wattage	:	129W
Delivered Lumens	:	2900LM
Kelvin	:	3000K
CRI	:	90
Dimmable	:	YES

TECHNICAL DETAILS

Hanging Support Type	:	WIRE
Canopy / Backplate Length	:	36.75"
Canopy / Backplate Height	:	1.5"
Canopy / Backplate Width	:	6.75"
IP Rating	:	IP22
Location	:	DRY
Approval	:	
Title 24	:	YES
Beam Angle	:	360

OPTIONS AVAILABLE

ITEM NO.	FINISH	SHADE
38044-014	**BRUSHED GOLD**	
38044-021	**ANODIZED BLACK**	
38044-030	**ANODIZED SILVER**	

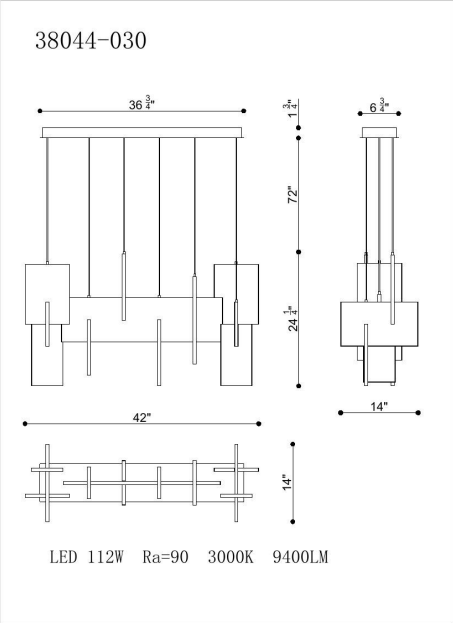

PROJECT INFORMATION

Job Name: Date: Type:

Comments: