**TEL** 905.695.2055 **toll free** 1.800.660.5391
**FAX** 905.695.2056 **toll free** 1.800.660.5390
33 West Beaver Creek Road Richmond Hill, Ontario Canada L4B 1L8

# CAMPISI, 6-LIGHT 28IN PENDANT CHANDELIER

## PRODUCT DETAILS

| | | |
|---|---|---|
| No. | : | 38155-017 |
| Product Color | : | GOLD |
| Product Material | : | METAL |
| Shade / Accent Colour | : | CLEAR |
| Shade / Accent Material | : | GLASS |
| Diameter | : | 28" |
| Height | : | 22" |
| Overall Height | : | 80" |
| Weight | : | 13.6LBS |

## LIGHT SOURCE DETAILS

| | | |
|---|---|---|
| Number of Bulbs | : | 6 |
| Light Source Type | : | B10 |
| Input Voltage | : | 120V |
| Bulb Voltage | : | 120V |
| Socket Type | : | E12 |
| Wattage | : | 60W |
| Total Wattage | : | 360W |
| Bulb Included | : | NO |
| Dimmable | : | NO |

## OPTIONS AVAILABLE

| ITEM NO. | FINISH | SHADE |
|---|---|---|
| 38155-017 | **GOLD** | CLEAR GLASS |
| 38155-031 | **MATTE BLACK** | CLEAR GLASS |

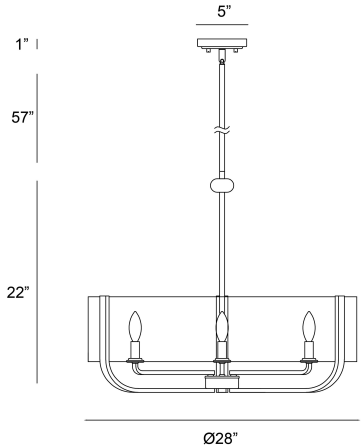


## TECHNICAL DETAILS

| | | |
|---|---|---|
| Hanging Support Type | : | ROD |
| Hanging Support Length | : | 57" |
| Rods Included | : | 3"+6"+12"+18"+18" |
| Canopy / Backplate Height | : | 1" |
| Canopy / Backplate Dia. | : | 5" |
| IP Rating | : | IP22 |
| Location | : | DRY |
| Approval | : | |
| Beam Angle | : | 360 |

## PROJECT INFORMATION

Job Name: _____ Date: _____ Type: _____

Comments: _____