TEL 905.695.2055 **toll free** 1.800.660.5391
FAX 905.695.2056 **toll free** 1.800.660.5390
33 West Beaver Creek Road Richmond Hill, Ontario Canada L4B 1L8

RIVAMAR, 13IN OUTDOOR WALL LANTERN

PRODUCT DETAILS

No.	:	44262-013
Product Color	:	GOLD-BLACK MIX
Shade / Accent Colour	:	CLEAR
Shade / Accent Material	:	GLASS
Width	:	6"
Height	:	13.25"
Ext	:	7.25"
Shade Height	:	8"
Shade Diameter	:	4"

LIGHT SOURCE DETAILS

Number of Bulbs	:	1
Light Source	:	BULB
Light Source Type	:	T10
Input Voltage	:	120V
Bulb Voltage	:	120V
Socket Type	:	E26
Wattage	:	60W
Total Wattage	:	60W
Bulb Included	:	NO
Dimmable	:	YES

OPTIONS AVAILABLE

ITEM NO.	FINISH	SHADE
44262-013	GOLD-BLACK MIX	

TECHNICAL DETAILS

Hanging Support Type	:	J-BOX
Canopy / Backplate Length	:	4.75"
Canopy / Backplate Height	:	8.5"
Canopy / Backplate Width	:	0.75"
IP Rating	:	IP44
Location	:	WET
Beam Angle	:	360

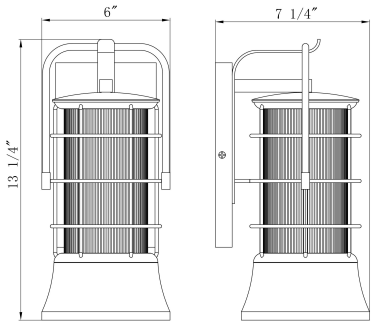

PROJECT INFORMATION

Job Name: _____ Date: _____ Type: _____

Comments: _____