EUROfase INC.

TEL 905.695.2055 **toll free** 1.800.660.5391
FAX 905.695.2056 **toll free** 1.800.660.5390

33 West Beaver Creek Road Richmond Hill, Ontario Canada L4B 1L8

TE162LED, 2-LIGHT LED MULTIPLE RECESS

PRODUCT DETAILS

No.	:	TE162LED-30-4-01
Product Color	:	BLACK
Shade / Accent Colour	:	BLACK
Length	:	10.4375"
Width	:	6.125"
Height	:	6.3125"

LIGHT SOURCE DETAILS

Light Source Type	:	INTEGRATED LED
Input Voltage	:	120V
Bulb Voltage	:	120V
Socket Type	:	LED
Total Wattage	:	30W
Initial Lumens	:	2580lm
Kelvin	:	3000K
CRI	:	90
Dimmable	:	Yes

OPTIONS AVAILABLE

ITEM NO.	FINISH	SHADE
TE162LED-30-4-01	BLACK	BLACK
TE162LED-30-4-02	WHITE	BLACK
TE162LED-30-4-0N	PLATINUM	BLACK
TE162LED-30-4-22	WHITE	WHITE

TECHNICAL DETAILS

Driver	:	ES 16.8W Current Driver
Location	:	DRY
Approval	:	
Title 24	:	Yes
Beam Angle	:	40
Cut Hole Length	:	9.5"
Cut Hole Width	:	5.125"

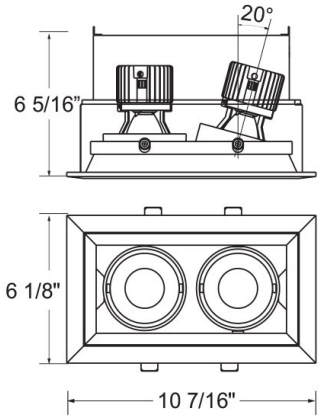

PROJECT INFORMATION

Job Name: Date: Category:

Comments: