TEL 905.695.2055 **toll free** 1.800.660.5391
FAX 905.695.2056 **toll free** 1.800.660.5390
33 West Beaver Creek Road Richmond Hill, Ontario Canada L4B 1L8

TR-A301, TRIM,3-INCH SHOWER DOME

PRODUCT DETAILS

No.	:	TR-A301-101
Product Color	:	SATIN NICKEL
Shade / Accent Colour	:	FROST
Diameter	:	3.625"
Height	:	1.625"
Weight	:	0.3lbs

LIGHT SOURCE DETAILS

Number of Bulbs	:	1 / 1
Light Source	:	Halogen / Halogen
Light Source Type	:	MR16 / GU10
Input Voltage	:	120 / 120V
Bulb Voltage	:	12 / 120V
Socket Type	:	/
Wattage	:	50 / 50W
Total Wattage	:	50 / 50W
Bulb Included	:	No / No
Dimmable	:	Yes / Yes

OPTIONS AVAILABLE

ITEM NO.	FINISH	SHADE
TR-A301-101	SATIN NICKEL	FROST
TR-A301-123	CHROME	FROST
TR-A301-57	WHITE	FROST

TECHNICAL DETAILS

Location	:	DAMP
Approval	:	
Cut Hole Diameter	:	3.25"

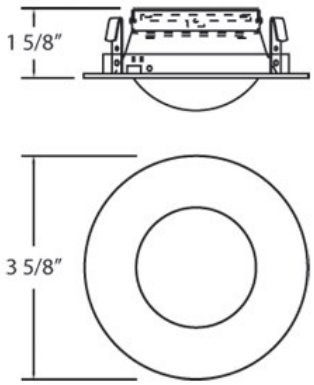

PROJECT INFORMATION

Job Name: Date: Category:

Comments: